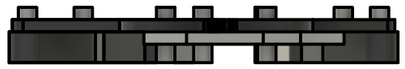

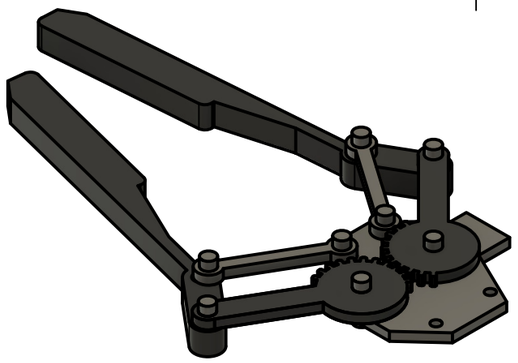

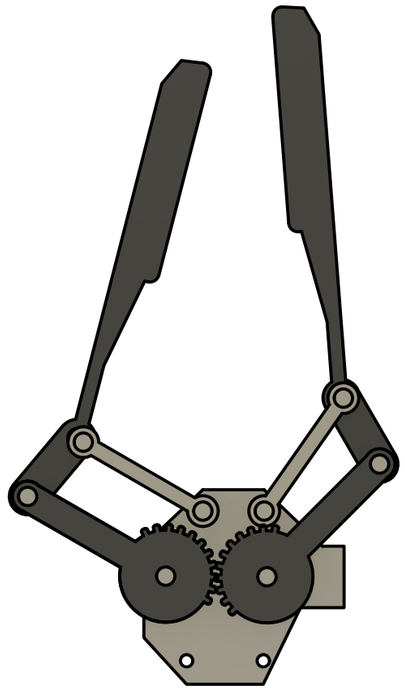

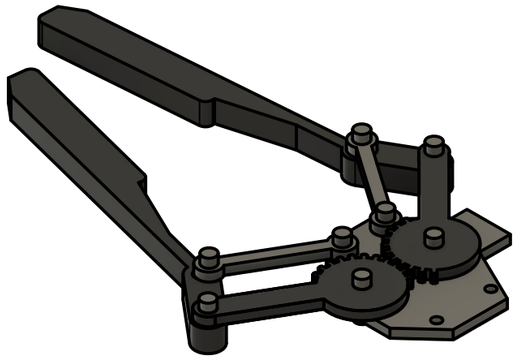

Dept.	Technical reference	Created by	Approved by
		Sasirekha B 19-03-2026	
		Document type	Document status
		Title EX. 6.1	DWG No.
			Rev. / Date of issue / Sheet 1/1